CARRY-BIKE UL 48

02094-04-

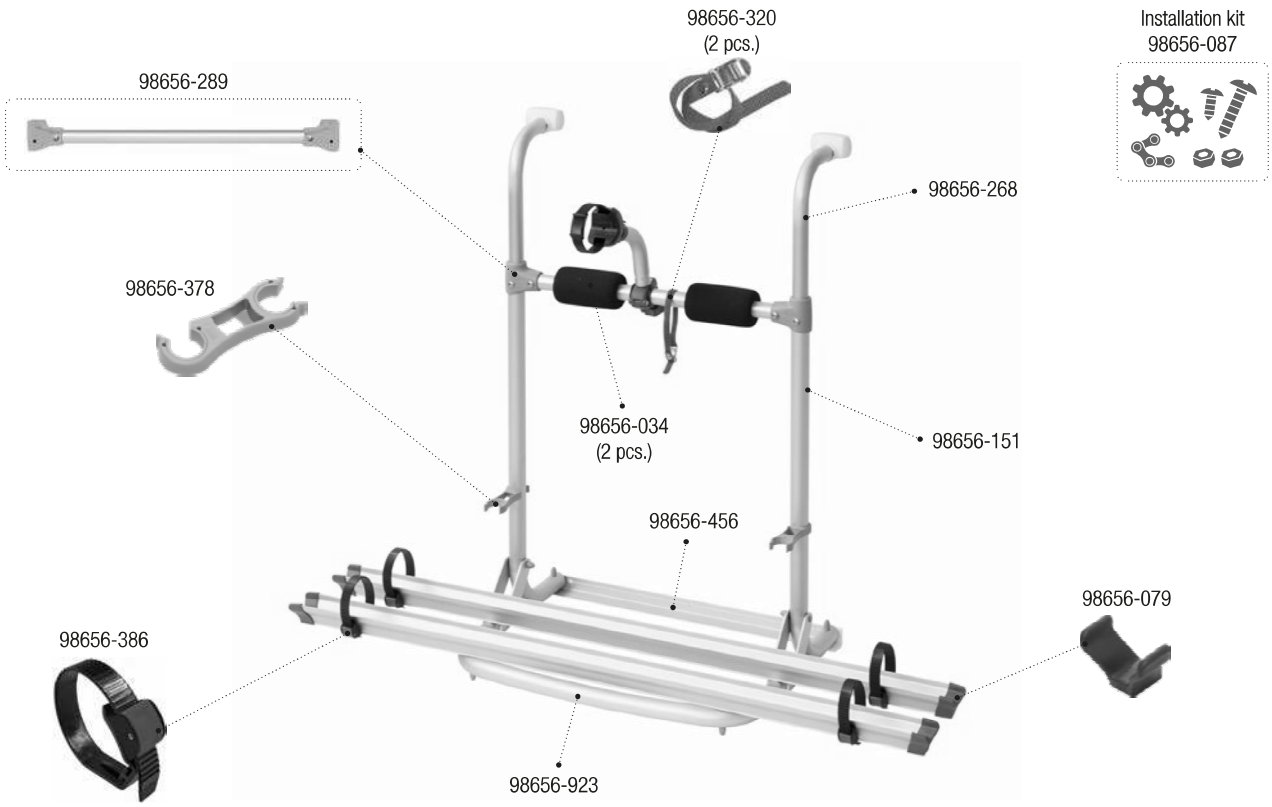

CARRY-BIKE CL

02093B87A [Black] · 02093B87B [Blue] · 02093B87G [Grey]

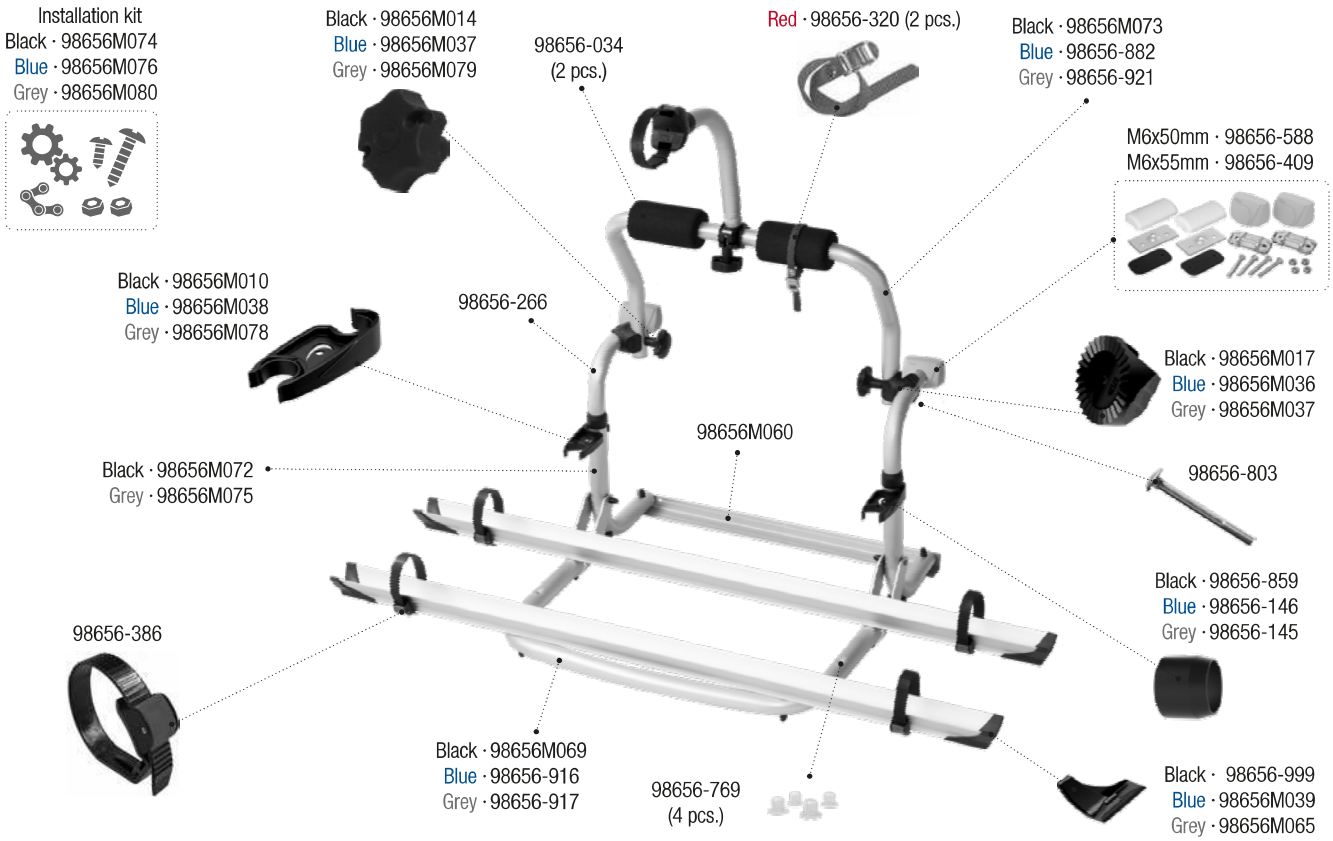

CARRY-BIKE CL

02093A87- [Red] · 02093A87B [Blue] · 02093A87G [Grey] · Version 2015

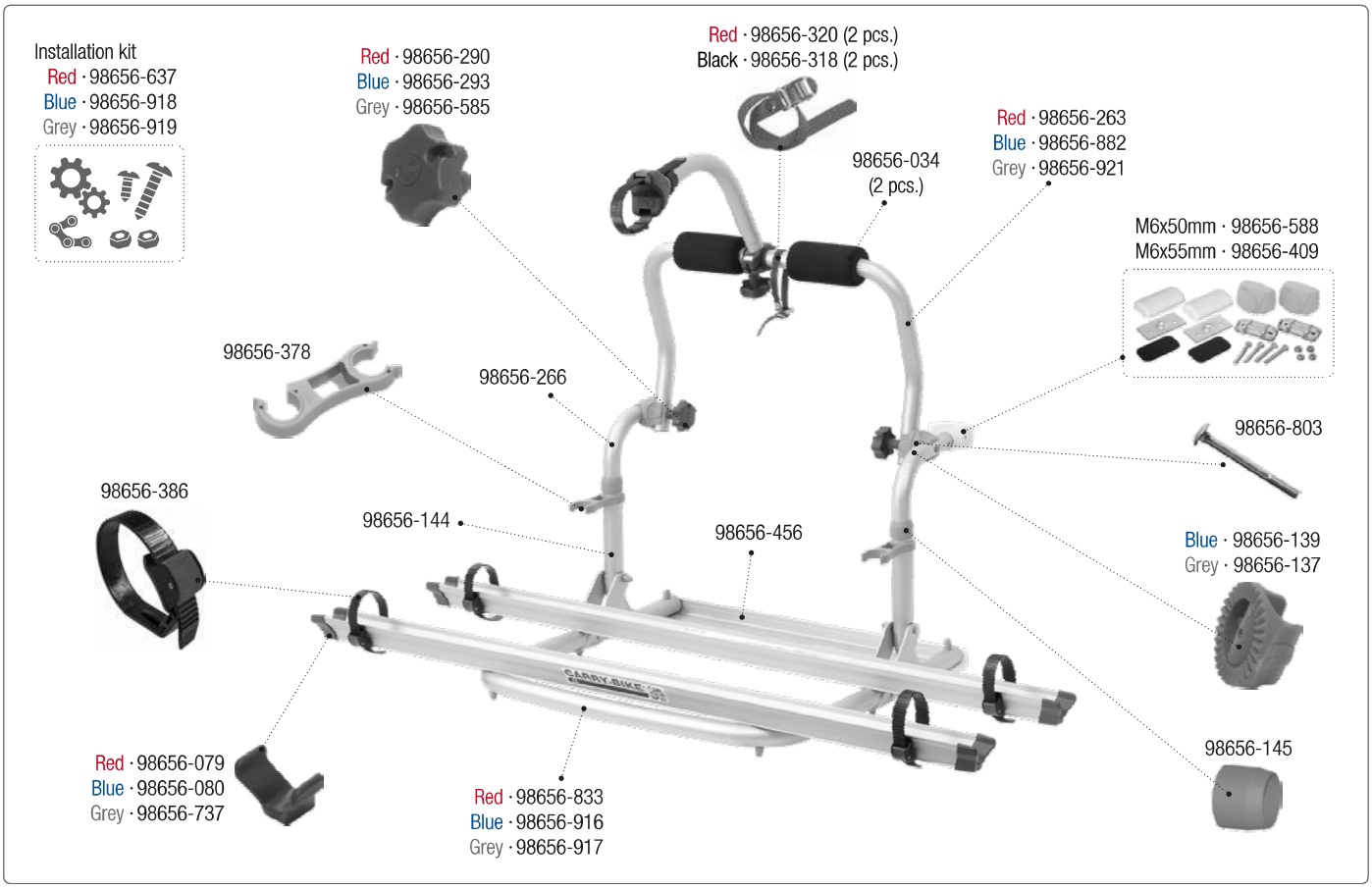

CARRY-BIKE CL

02093-87- Version 2008

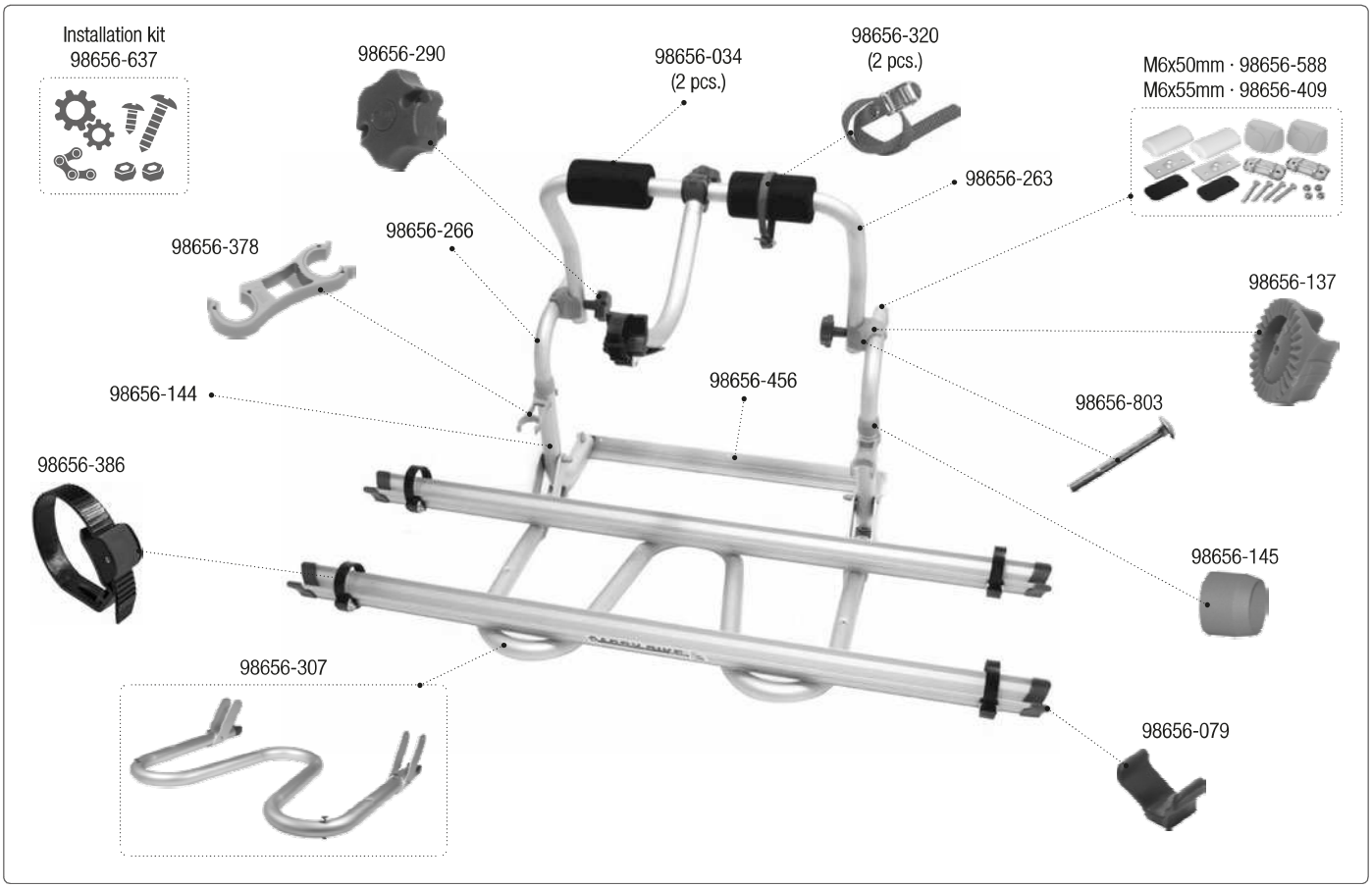

CARRY-BIKE CL

02093-87- Version 2007

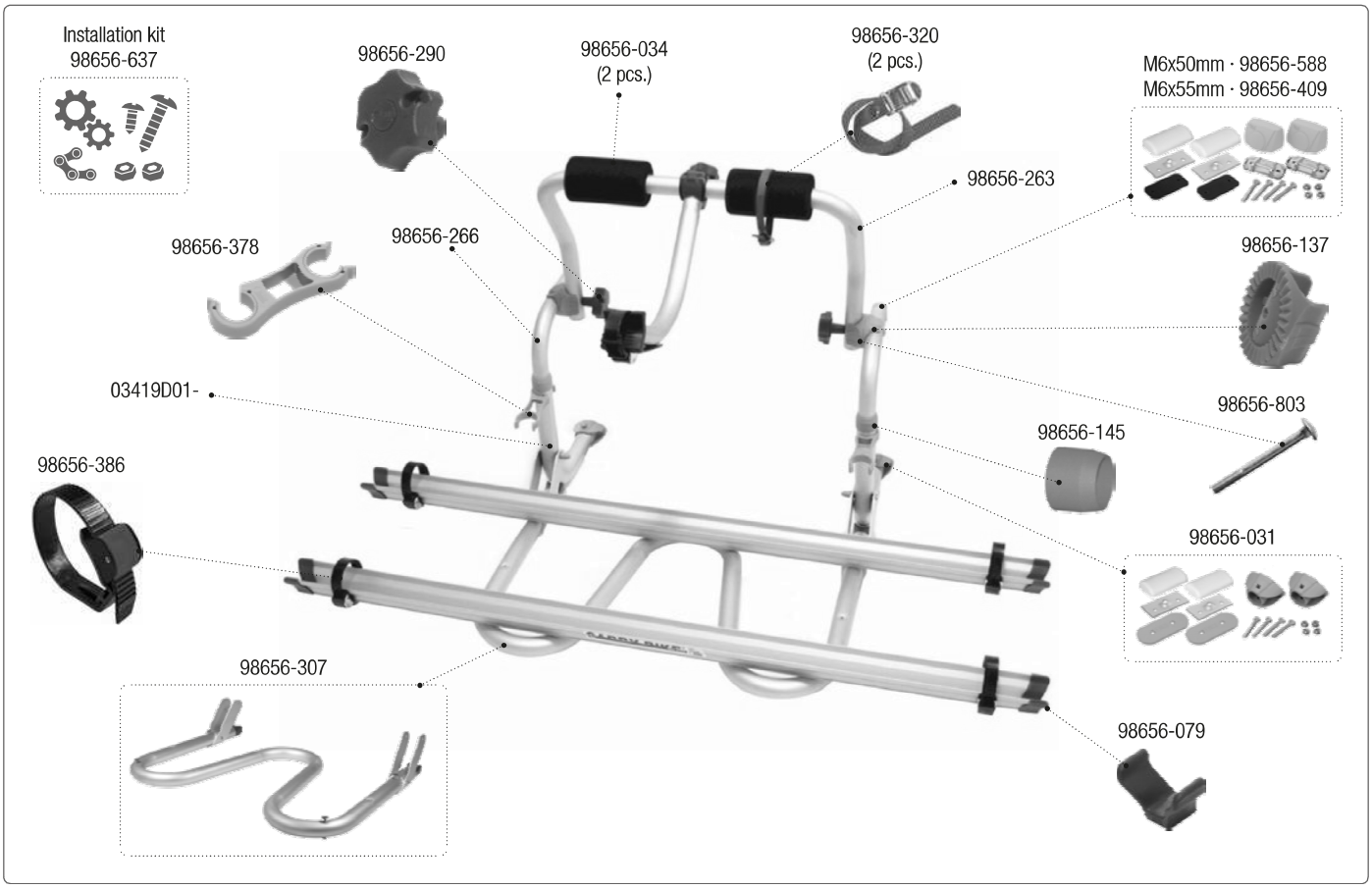

CARRY-BIKE CL
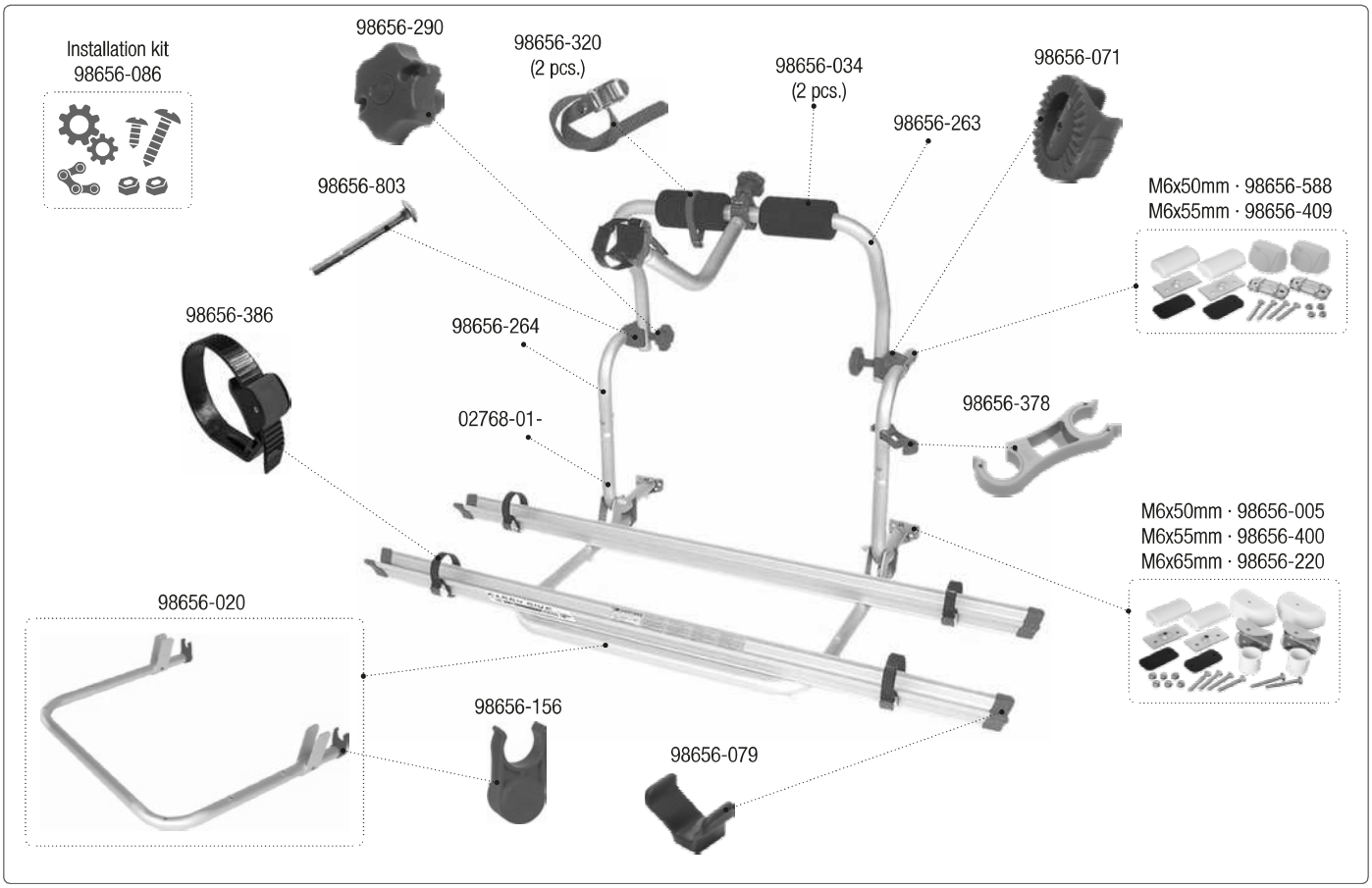
02093-08- Before 2007