FIAMMA CaravanStore XL 280-550

Version 2018

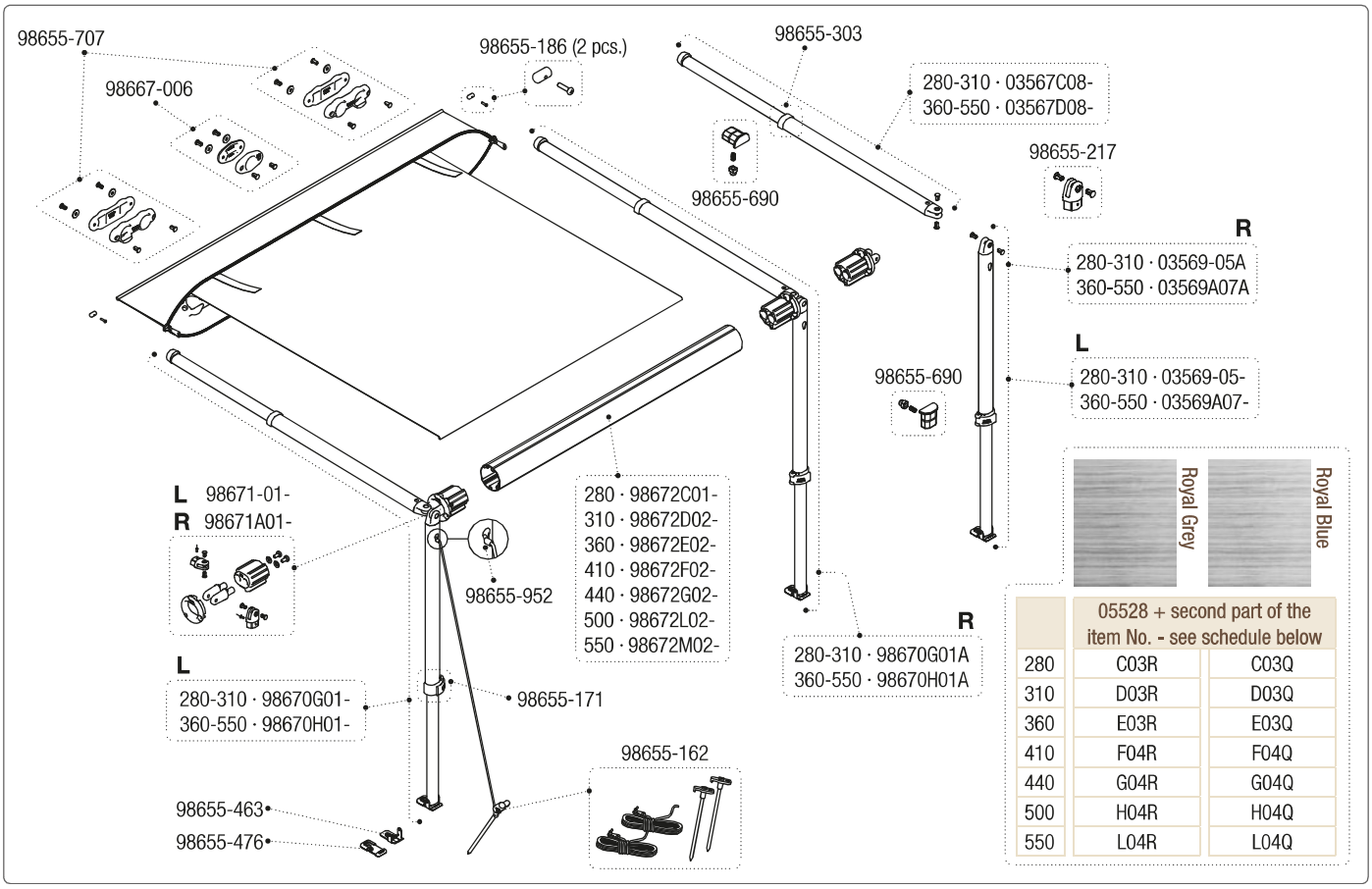

	05528 + second part of the item No. - see schedule below	
280	C03R	C03Q
310	D03R	D03Q
360	E03R	E03Q
410	F04R	F04Q
440	G04R	G04Q
500	H04R	H04Q
550	L04R	L04Q

FIAMMA CaravanStore 190-255

Version 013/014 · S/N > 9580700 (F701991)

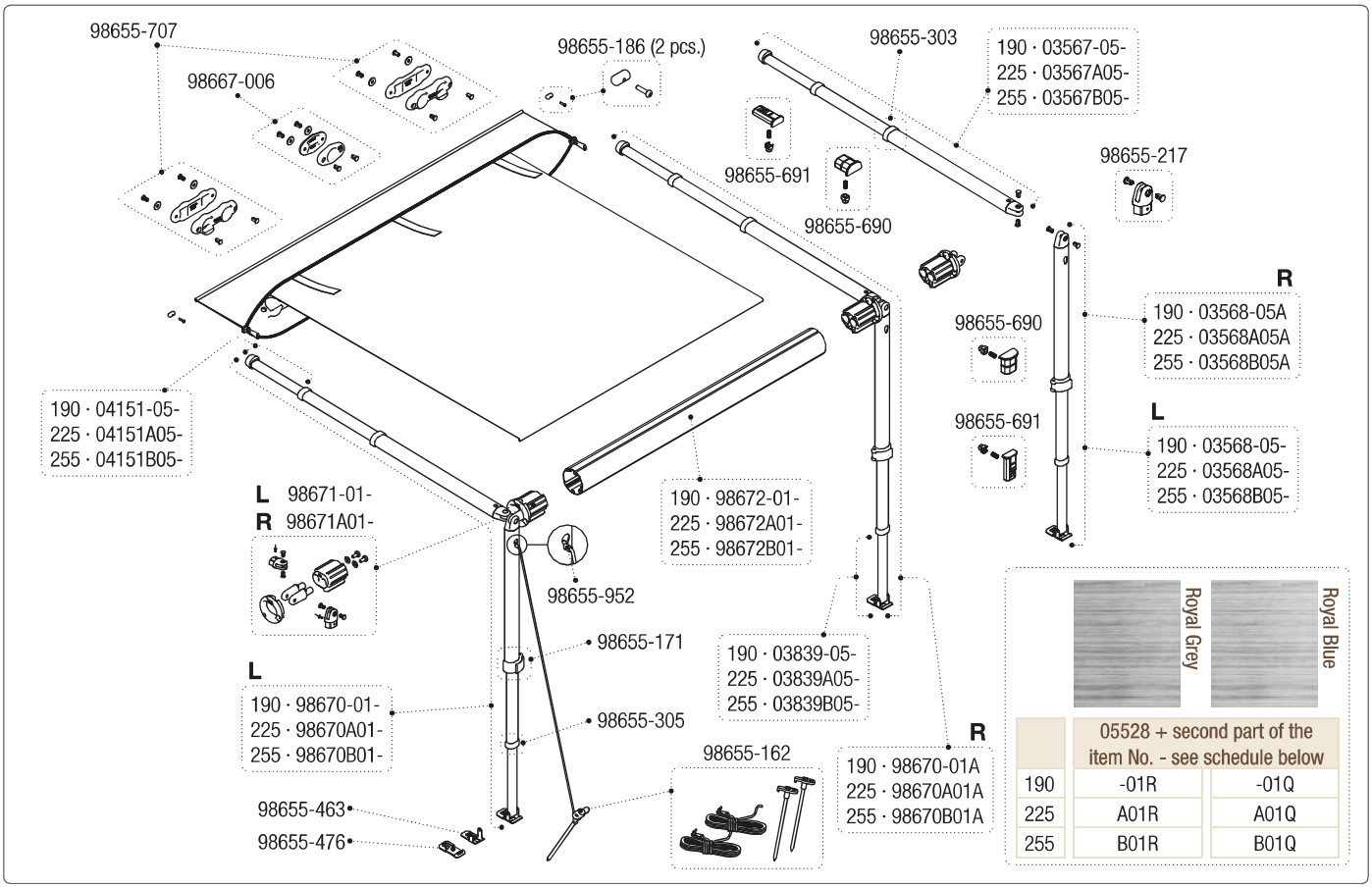

	05528 + second part of the item No. - see schedule below	
190	-01R	-01Q
225	A01R	A01Q
255	B01R	B01Q